PART NAME		MATERIAL	REMARK
FRAME	SIDE RAIL	SPA-H/SM50A	
	END RAIL	SM50A/SS41	
	CORNER POST	SM50A	
	CROSS MEMBER	SPA-H	
PANEL	DOOR	SPA-H	
	ROOF	SPA-H	
	SIDE	SPA-H	
	FRONT	SPA-H	
WOODEN FLOOR		APITONG/HARDWOOD	
DOOR LOCKING ROD ASS'Y			

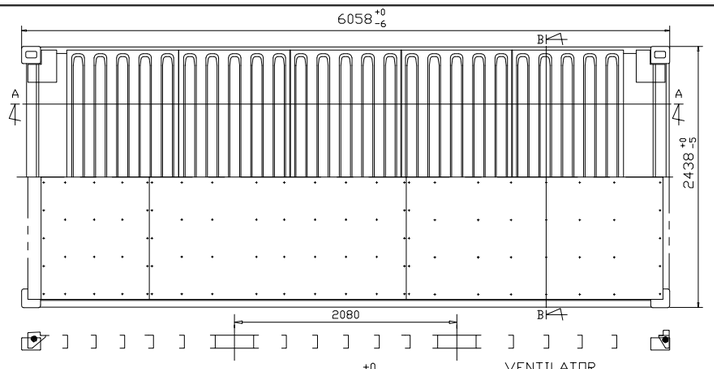

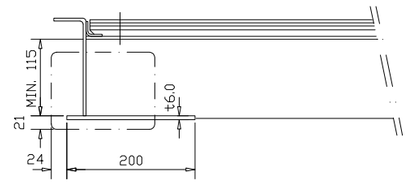

DETAIL OF FORKLIFT POCKET

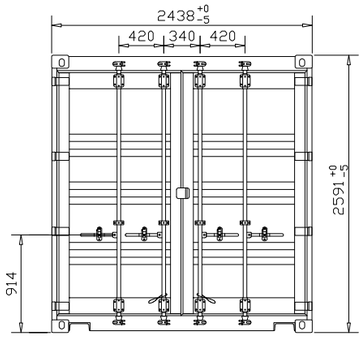

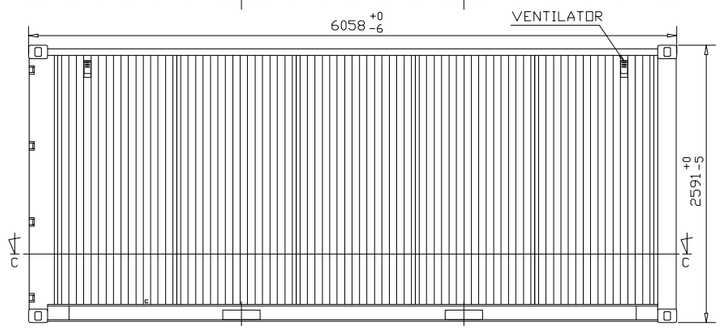

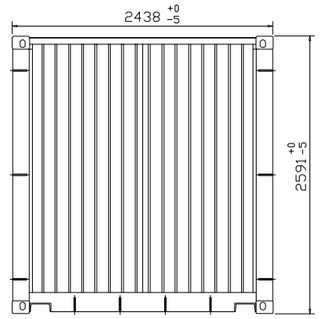

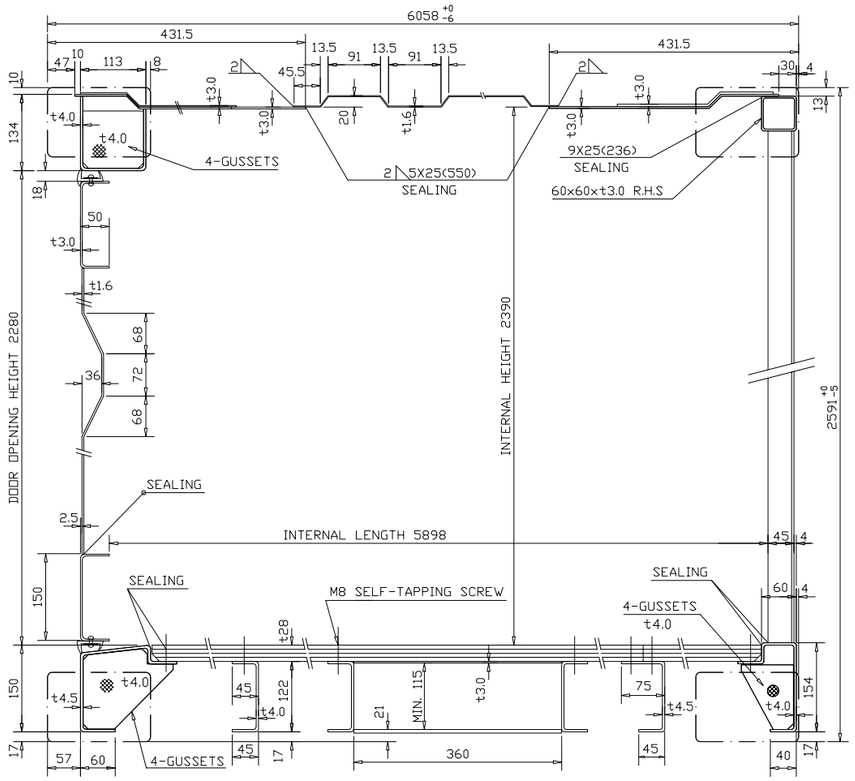

SECTION A-A S=1/10

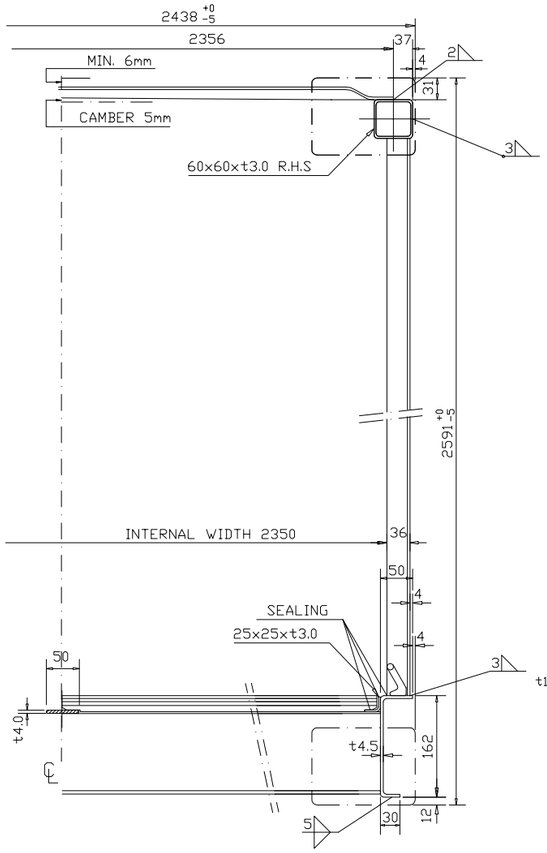

SECTION B-B S=1/5

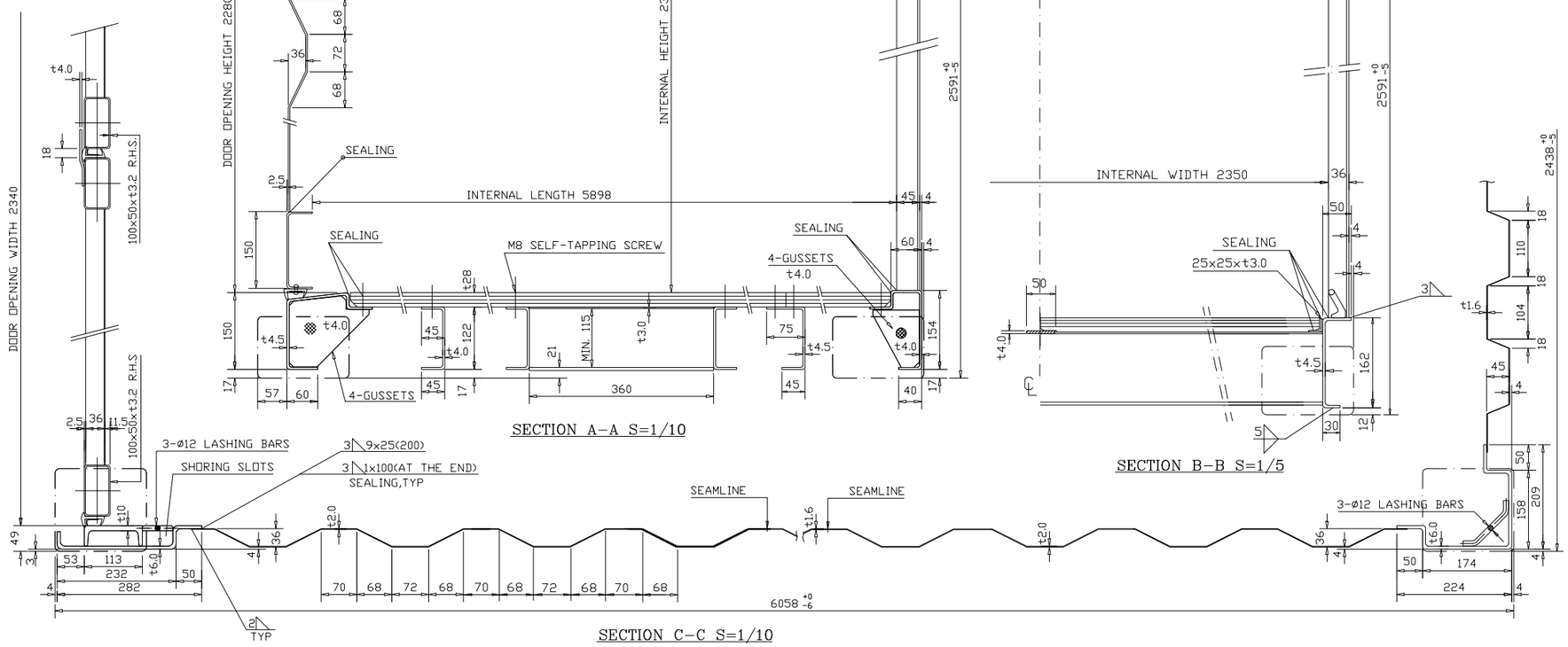

SECTION C-C S=1/10

DRAWING NO.	DESCRIPTION	REMARK
	BASE ASSEMBLY	
	DOOR ASSEMBLY	
	ROOF ASSEMBLY	
	SIDE ASSEMBLY	R/H:1 L/H:1
	FRONT ASSEMBLY	

CLASSIFICATION		DIMENSION			
EXTERNAL	LENGTH	6,058	+0 −6mm	19'10 1/2"	+0 −1/4"
	WIDTH	2,438	+0 −5mm	8' 0"	+0 −3/16"
	HEIGHT	2,591	+0 −5mm	8' 6"	+0 −3/16"
INTERNAL	LENGTH	5,898	mm	19' 4 13/64"	
	WIDTH	2,350	mm	7' 8 33/64"	
	HEIGHT	2,390	mm	7'10 3/32"	
DOOR OPENING	WIDTH	2,340	mm	7' 8 1/8"	
	HEIGHT	2,280	mm	7' 5 49/64"	
INTERNAL CUBIC CAPACITY		33.1	CU.m	1,170	CU.ft
MAXIMUM GROSS WEIGHT		30,480	kg	67,200	lb
TARE WEIGHT		2,060	kg	4,540	lb
MAXIMUM PAYLOAD		28,420	kg	62,660	lb
STACKING TEST LOAD(PER POST)		86,400	kg	190,480	lb
FLOOR STRENGTH LOAD		7,260	kg	16,000	lb

MARK	Q'TY	REV. FILE NO.	SIGNATURE	DATE

TITLE: GENERAL ASSEMBLY

ISSUE

OWNER: ADP

TYPE: ISO-1CC 20'x8'x8'6"

W'T(KG)

SCALE 1:60

DESIGNED | APPROVED

CHECKED | DATE

ADAPTAINER LIMITED

Office Address: Unit 3 Reliant House,Angel Lane,Fore Street,Ipswich,IP4 1JX